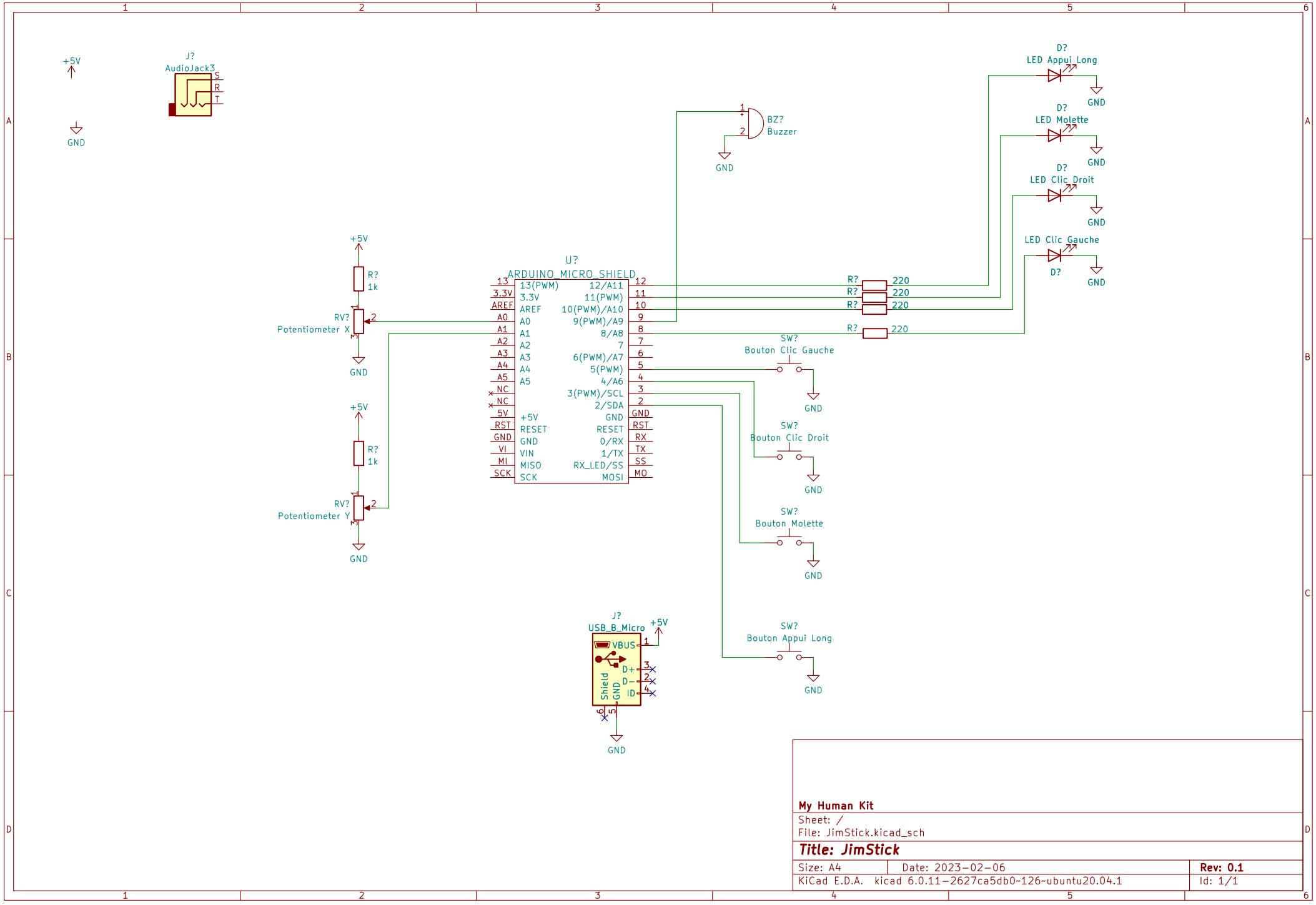

My Human Kit

Sheet: /

File: JimStick.kicad_sch

Title: JimStick

Size: A4	Date: 2023-02-06	**Rev: 0.1**
KiCad E.D.A. kicad 6.0.11-2627ca5db0~126~ubuntu20.04.1		Id: 1/1